Installation instructions

Akrapovič Exhaust System

Slip-On

for the

Yamaha V-Max

502424

EN

Revision 1.0 02/2016

www.akrapovic.com

Congratulations on purchasing the Akrapovič exhaust system. The Akrapovič exhaust system is a product of Akrapovič d.d., Malo Hudo 8a, 1295 Ivančna Gorica, Slovenia ("Akrapovič").

Please read this entire installation manual carefully prior to installing and using the Akrapovič exhaust system.

Akrapovič exhaust system should only be installed by persons skilled in motorcycle exhaust system installation and performance. The instructions provided in this manual should be followed to ensure proper installation and safe use of the Akrapovič exhaust system. Akrapovič and/or its partners shall not be held liable for any damage or personal injury (including direct, indirect, or consequential damage) sustained as a result of improper installation of the Akrapovič exhaust system or its use and maintenance contrary to the instructions and warnings contained herein.

If you have any questions regarding the installation and/or proper use of the Akrapovič exhaust system or this manual, please contact your local Akrapovič partner.

For more information on the Akrapovič exhaust systems, see the official Akrapovič website at:
http://www.akrapovic.com

GENERAL INFORMATION

Your safety is our number one priority. Please ride your motorcycle responsibly, safely and always obey local traffic rules.

All statements made with regard to the exhaust system's compliance are made in respect of the exhaust system "as is". Any modifications of the Akrapovič exhaust system or its improper installation, use or maintenance that is not in accordance with this Installation manual, may result in severe damage to the exhaust system and/ or engine, as well as personal injury, and may affect the exhaust system's compliance with the legal requirements, such as exhaust system's air and/ or noise emissions (as an example, the motorcycle may not be suitable for use on public roads any longer), as well as warranty coverage.

The exhaust system may only be used in accordance with relevant laws and regulations, including state and federal, where applicable.

Damage caused by improper installation, use and maintenance of the Akrapovič exhaust system is not covered by the Akrapovič warranty. Please refer to the enclosed warranty with regard to the terms of our warranty.

Technical specifications of Akrapovič exhaust systems and related products are subject to change without notice.

COPYRIGHT AND OTHER RIGHTS NOTICE

The Akrapovič trademark, including corporate logos and emblems, are subject to copyright as well as trademark rights of Akrapovič, its licensors, or third persons authorizing Akrapovič to use them.

Any reproduction, technical or other manipulation, translation, or other use of the copyright and/or trademark rights contained herein is prohibited without the explicit prior written consent of Akrapovič. The same especially applies to the entire contents of this manual and/or any of its parts, including but not limited to technical specifications, instructions, graphs, photographs, and so on included in this manual.

Akrapovič takes all copyright and other rights infringement cases under serious consideration. If you have any reason to believe that your exhaust system is not an original Akrapovič product, please contact our local partners or Akrapovič at info@akrapovic.com.

SAFETY AND COMPLIANCE WARNING, PLEASE READ CAREFULLY

BEFORE REMOVING THE STOCK EXHAUST SYSTEM AND BEGINNING THE INSTALLATION OF YOUR NEW AKRAPOVIČ EXHAUST, PLEASE MAKE SURE THAT ALL ITEMS LISTED BELOW ARE VERIFIED:

- THIS MANUAL IS SPECIFIC TO THE MOTORCYCLE INDICATED ON THE COVER PAGE, FOR WHICH IT IS DESIGNED. INSTALLATION PROCEDURES VARY DEPENDING ON THE TYPE OF MOTORCYCLE. PLEASE VERIFY THAT THE AKRAPOVIČ **EXHAUST SYSTEM AND THIS INSTALLATION MANUAL CORRESPOND TO THE TYPE OF YOUR MOTORCYCLE.**
- THE EXHAUST SYSTEM CAN GET EXTREMELY HOT DURING AND AFTER IT IS USED. MAKE SURE NOT TO TOUCH THE EXHAUST SYSTEM UNTIL IT IS COMPLETELY COOL. **ALLOW THE EXHAUST AND ENGINE TO COOL DOWN BEFORE BEGINNING INSTALLATION OR ANY OTHER WORK ON THE EXHAUST SYSTEM.**
- MAKE SURE THE MOTORCYCLE IS **SECURELY POSITIONED TO PREVENT TIPPING OVER** AND DAMAGE TO YOURSELF AND OTHERS, OR THE MOTORCYCLE.
- PLEASE CHECK THE PARTS YOU RECEIVED AGAINST THE PARTS LIST AVAILABLE ON OUR WEBSITE (PLEASE USE THE QR CODE ON THE FRONT PAGE OR LOOK FOR “SCHEMATIC VIEW” IN THE RESPECTIVE PRODUCT PAGE ON WWW.AKRAPOVIC.COM). MAKE SURE THAT YOU HAVE **ALL THE PARTS NECESSARY FOR THE INSTALLATION** OF YOUR NEW AKRAPOVIČ EXHAUST SYSTEM. IF ANY OF THE PARTS IS MISSING, PLEASE DO NOT PROCEED WITH UNINSTALLING YOUR STOCK EXHAUST SYSTEM/ INSTALLING THE AKRAPOVIČ EXHAUST SYSTEM AND CONTACT THE RETAILER WHERE YOU PURCHASED THE AKRAPOVIČ EXHAUST SYSTEM.
- ALWAYS **SECURE YOUR MOTORCYCLE’S GROUND CLEARANCE.** FOR ADVANCED USERS, WE RECOMMEND YOU CHECK THE MOTORCYCLE SPRING PRELOAD SETTINGS TO OPTIMIZE GROUND CLEARANCE WHERE POSSIBLE.
- EVERY EXHAUST SYSTEM MUFFLER HAS ITS UNIQUE SERIAL NUMBER, WHICH IDENTIFIES THE AUTHENTICITY OF THE PRODUCT. YOU CAN FIND THE SERIAL NUMBER ON THE MUFFLER’S INLET PIPE. PLEASE REFER TO THE PICTURE BELOW. PLEASE VERIFY THAT YOUR EXHAUST SYSTEM IS AN ORIGINAL AKRAPOVIČ PRODUCT. IF YOU HAVE ANY DOUBTS, PLEASE CONTACT THE RESELLER WHERE YOU PURCHASED THE EXHAUST SYSTEM OR AKRAPOVIČ PARTNERS. THIS MANUAL, ANY CERTIFICATES AND AKRAPOVIČ WARRANTY APPLY TO ORIGINAL PRODUCTS ONLY.

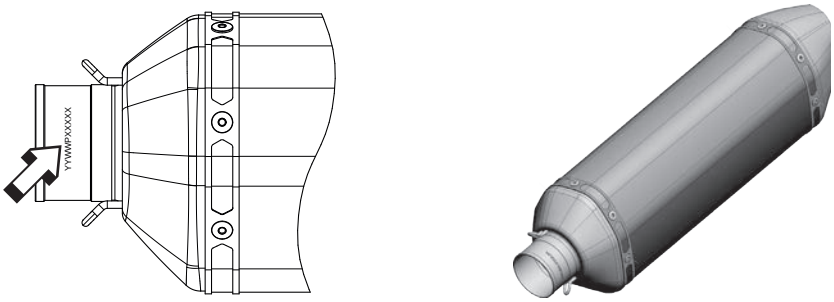

SERIAL NUMBER POSITION

NOISE AND EMISSION WARNINGS

General warning
Because of the world-wide distribution of Akrapovič d.d. products, neither Akrapovič d.d. nor any of its subsidiaries make any representation that the products comply with the air and/or noise emissions laws, or labeling laws, of any jurisdiction. The purchasers are entirely responsible for informing themselves of the applicable laws where the products are to be used and to comply with those law.

Although legal compliance of Akrapovič products in a specific country should be determined by the user, you can find some basic guidance on compliance of your Akrapovič exhaust system with various legal requirements on the product-related part of our website (please use the QR code on the front page or look for the respective product page on www.akrapovic.com). For EC and ECE type approvals, please refer to the certificate enclosed to your product.

USA WARNING

Various U.S. states and the U.S. federal government have individual laws regulating the use of aftermarket exhaust parts and systems, especially as those parts and systems modify, remove, or replace original equipment catalysts. Please consult the appropriate laws in your area before installing any aftermarket part or system on your vehicle to ensure compliance with all applicable laws. Neither Akrapovic d.d. nor any of their subsidiaries or the sellers of the parts or systems make any representation that any of their parts or systems comply with any such laws.

CALIFORNIA WARNING

California laws prohibit the use of any aftermarket exhaust part or system that modifies, removes or replaces original equipment catalysts unless the California Air Resources Board has issued an Executive Order regarding such part or system or unless the part or system is exempted by being used only on racing vehicles on closed courses. Neither Akrapovic d.d. nor any of their subsidiaries make any representation that any of their parts or systems has received such an Executive Order or that any of their parts or systems conform with the racing vehicles exemption. The purchasers are entirely responsible for informing themselves of applicable California laws and to comply with those laws.

GENERAL NOTE

Photographs and other illustrations in this manual are symbolic and are intended to help represent individual steps for proper installation and use, as well as for a general overview. The actual component parts of the Akrapovič exhaust system may not entirely correspond to the photographs and other illustrations.

SYMBOLS

The following symbols are used throughout these installation instructions:

TOOLS AND PROTECTIVE EQUIPMENT REQUIRED

TIGHTENING TORQUE

LUBRICATION

HAND TIGHTEN

INSTALLATION TIP

CAUTION OR IMPORTANT

USE BOLT SEALANT
Apply 3 to 4 small drops of bolt sealant onto the cleaned and degreased threads before tightening the bolts.

WARNING! Avoid contact with skin, eyes and mucous membranes. Do not inhale fumes. Keep out of reach of children.

USE ANTI-SEIZE LEAD-FREE COPPER PASTE (black tube)
Provides trouble-free and long-lasting protection against seizing, corrosion and rusting of bolts, threaded ends, nuts, joints, etc. Also protects against vibration, wear and impact.

WARNING! Avoid eye contact. Keep out of reach of children.

USE ANTI-SEIZING GREASE (white tube)
Prevents seizing, corrosion and excessive wear between the titanium components of your exhaust system.

WARNING! Avoid eye contact. Keep out of reach of children.

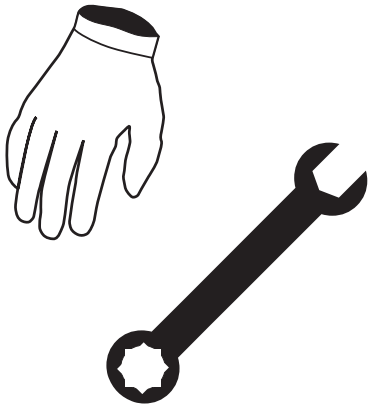

Tools & equipment

- **T-handle 8 mm wrench**
- **T-handle 10 mm wrench**
- **T-handle 10 mm swiveling wrench**
- **T-handle 4 mm three hexagon key wrench**
- **T-handle 5 mm three hexagon key wrench**
- **T-handle 6 mm three hexagon key wrench**
- **T-handle 5 mm swiveling three hexagon key wrench**
- **T-handle 8 mm swiveling three hexagon key wrench**
- **Combination 10 mm wrench**
- **Combination 22 mm wrench**
- **Cutting pliers**
- **Screwdriver**

PARTS LIST

The following parts should be found in the box:

- Installation Manual
- Homologation certificate/ compliance documents if applicable
- Warranty
- Fitting material
- Muffler and pipes

Detailed list of parts can be found on the Akrapovič website (please use the QR code on the front page or look for “Schematic view” in the respective product page on www.akrapovic.com).

REMOVAL OF STOCK EXHAUST SYSTEM:

The process of uninstalling the original exhaust system may vary depending on the existing exhaust system. Please follow the original exhaust system manufacturer’s instructions for uninstalling the original exhaust system.

If you for any reason decide otherwise, please note that any information provided in this respect herein should be considered as general information provided for your convenience only. Akrapovič shall not assume any liability or responsibility with regard to uninstalling your existing exhaust system, warranty coverage of such exhaust system or vehicle or their further fitness for use.

In case your Akrapovič exhaust system may not be used on certain roads or under certain conditions, please keep the stock or other exhaust system that you can use in such circumstances legally.

REMOVAL OF STOCK EXHAUST SYSTEM:

1. Put the motorcycle on a side stand, we recommend a racing stand. Make sure, that surface is solid and flat.
2. Unscrew the marked bolts and remove the stock heat shield. Perform the process on both sides of the motorcycle **(Figure 1).**

Figure 1

3. Unscrew the bolt from muffler sub-frame bracket and untighten the metal clamp at the muffler - catalytic converter box joint.Remove the stock muffler. Perform the process on both sides of the motorcycle **(Figure 2).**

Figure 2

4. **For OPEN SLIP-ON only:** pull the small handle for opening the back of the seat **(Figure 3).** Unscrew the marked bolts and remove the rider's seat **(Figure 4).**

Figure 3

Figure 4

5. **For OPEN SLIP-ON only:** unscrew the marked bolts and remove the passenger's seat **(Figure 5).**

Figure 5

6. **For OPEN SLIP-ON only:** unlock the left side panel with ignition key and remove the left side panel **(Figure 6).**

Figure 6

7. **For OPEN SLIP-ON only:** unscrew the marked bolt and remove the right side panel **(Figure 7).**

Figure 7

8. **For OPEN SLIP-ON only:** unscrew the marked bolts and remove six plastic fasteners **(Figure 8, 9).** Remove the seat cowling**.**

Figure 8

Figure 9

9. **For OPEN SLIP-ON only:** unscrew the marked bolts and remove the exhaust valve cower **(Figure 10).**

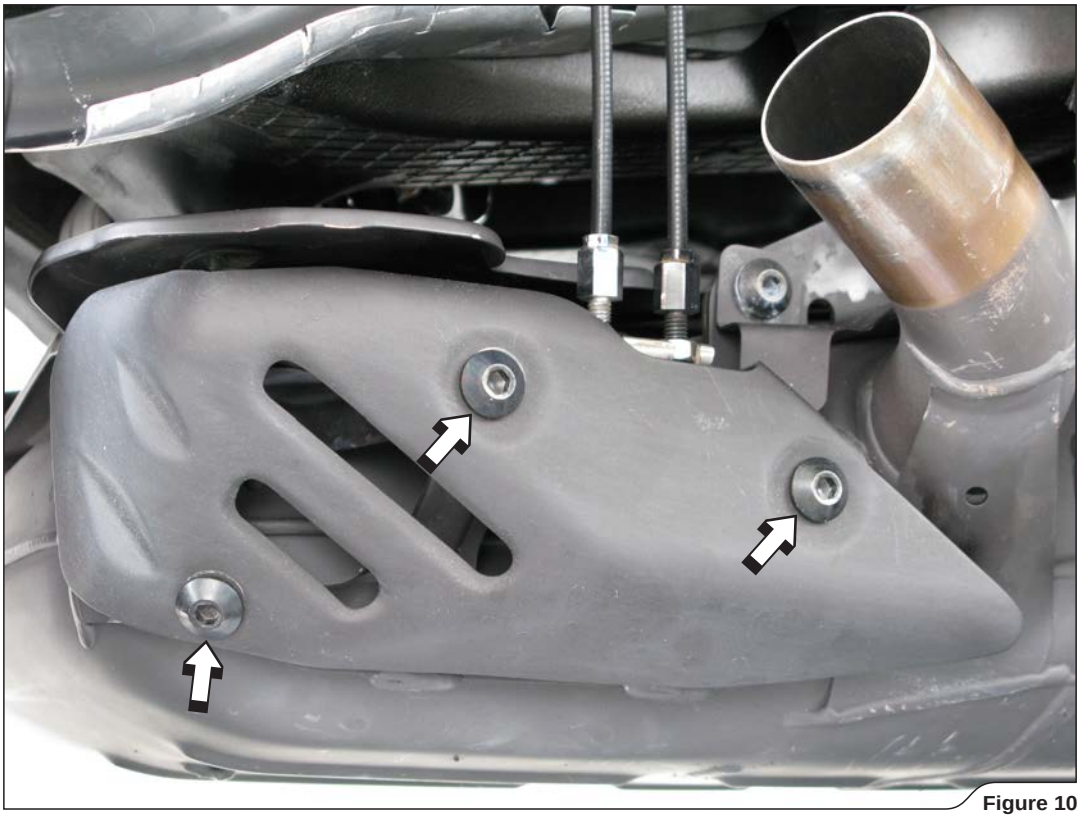

Figure 10

10. **For OPEN SLIP-ON only:** unscrew the nuts for easier removal the exhaust valve cables **(Figure 11).**

Figure 11

11. **For OPEN SLIP-ON only:** unscrew the marked bolts and remove the stock servo motor and anhook the cable of the exhaust valve **(Figure 12, 13).**

! **IMPORTANT: do not turn the the servo motor wheel with force or the servo motor could be damaged.**

! **IMPORTANT: do not disconnect or remove the servo motor!**

Figure 12

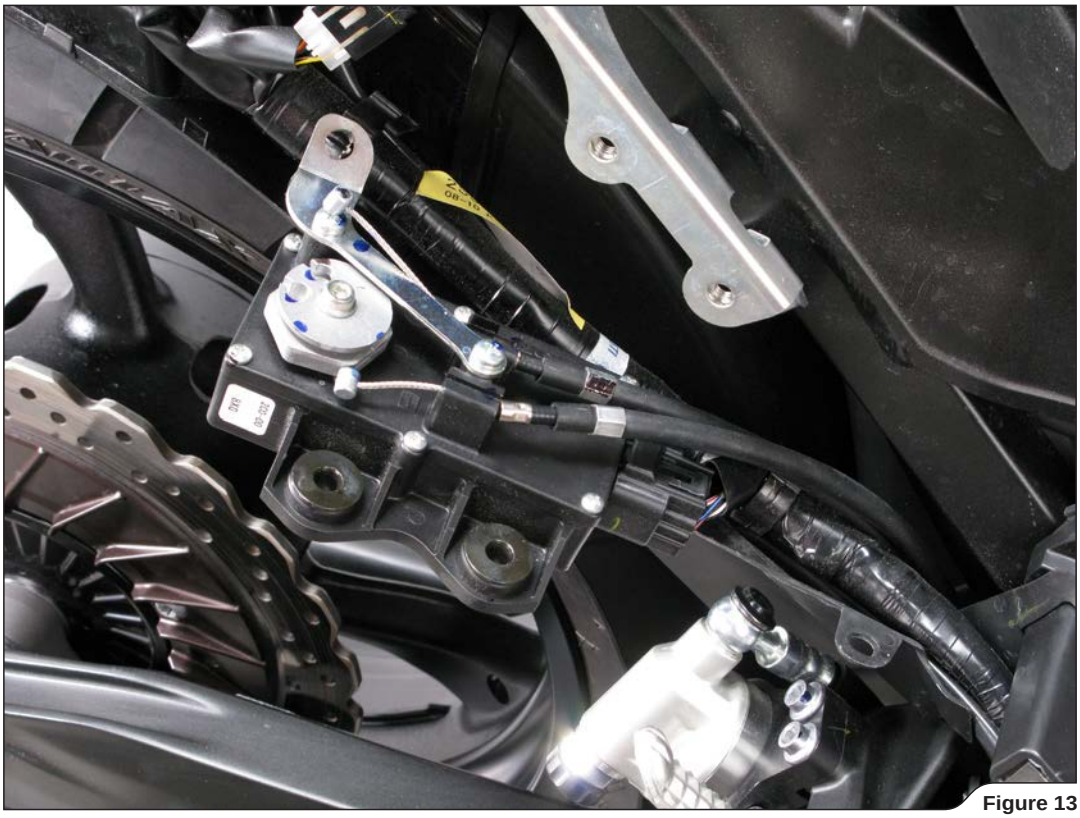

Figure 13

12. **For OPEN SLIP-ON only:** reatach the servo motor **(Figure 14).**

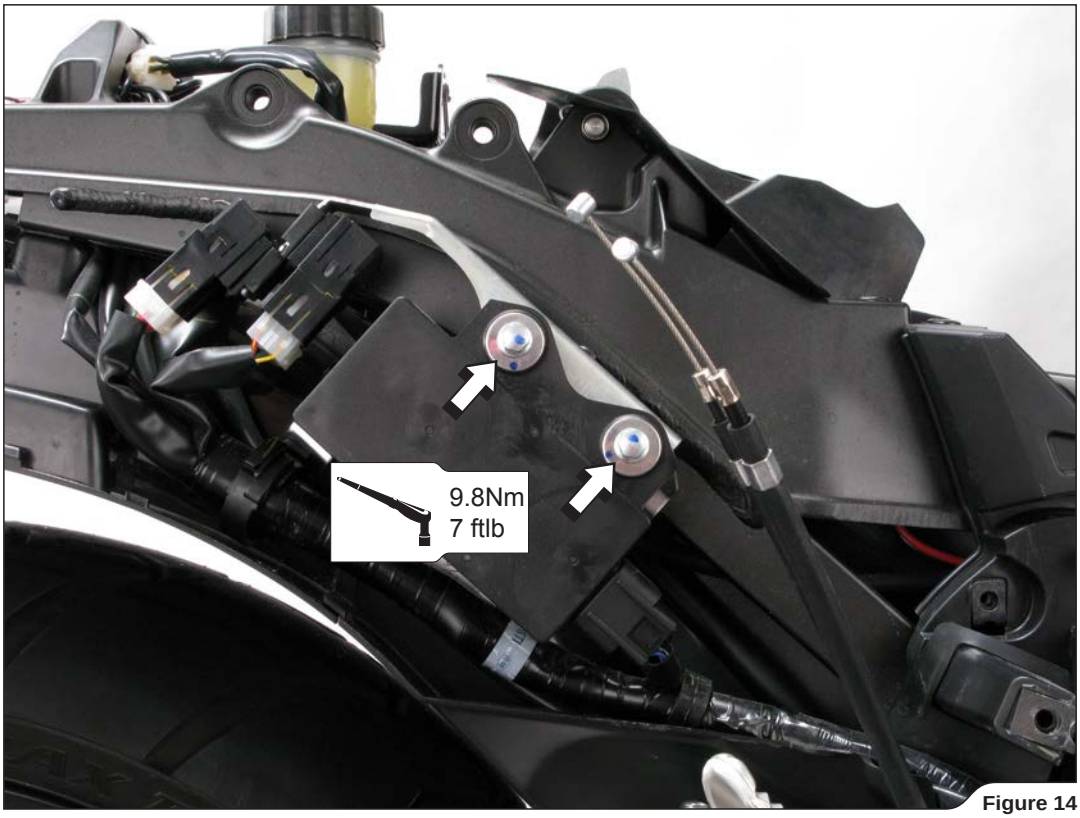

Figure 14

13. **For OPEN SLIP-ON only:** untighten the metal clamps at the catalytic converter box-header tubes joint **(Figure 15).**

Figure 15

14. **For OPEN SLIP-ON only:** untighten the metal clamp at the catalytic converter box - header tube joint and unscrew the marked bolts from chassis hanging brackets of the catalytic converter box **(Figure 16).**

Figure 16

15. **For OPEN SLIP-ON only:** untighten the metal clamp at the catalytic converter box - header tube joint and unscrew the marked bolt from chassis hanging bracket of the catalytic converter box **(Figure 17).**

Figure 17

16. **For OPEN SLIP-ON only:** loosen up the nuts of the front header tubes **(Figure 18).**

Figure 18

17. **For OPEN SLIP-ON only:** remove the stock catalytic converter box and unscrew the lambda sensor **(Figure 19).**

! **CAUTION: support the stock catalytic converter box during this procedure or it may fall off and damage you or the motorcycle!**

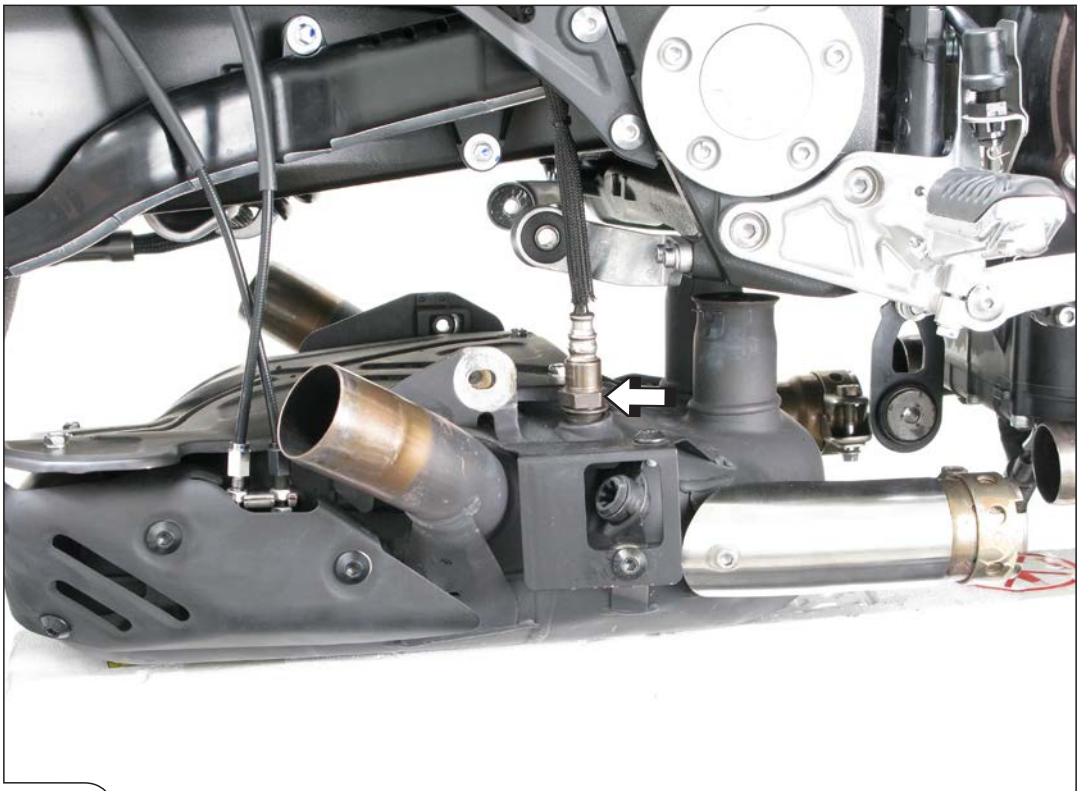

Figure 19

INSTALLATION OF THE AKRAPOVIČ SLIP-ON EXHAUST SYSTEM:

1. **For OPEN SLIP-ON only:** reposition the marked stock metal clamp with stock graphite gasket from stock catalytic converter box onto the Akrapovič collector **(Figure 20, 21).**

! **IMPORTANT: do not damage the stock graphite gasket!**

Figure 20

Figure 21

2. **For OPEN SLIP-ON only:** coat the bolts and interior of the metal clamps with Akrapovič antseize lead-free copper paste (black tube) and corectly install them onto the Akrapovič collector **(Figure 22).**

! **IMPORTANT: use anti-seize copper paste on bolt threads and interior of the metal clamp!**

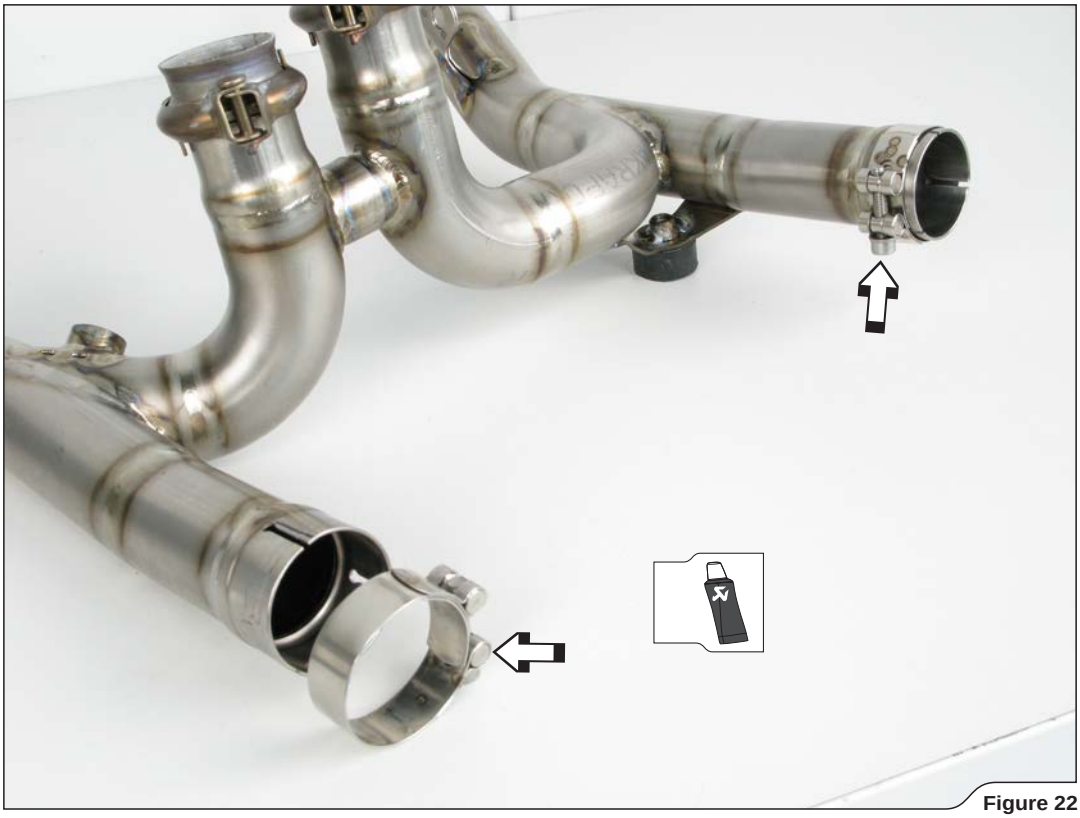

Figure 22

3. **For OPEN SLIP-ON only:** slide the collector onto the stock header tubes and hand tighten the marked bolts using stock bolts and Akrapovič nuts **(Figure 23).**

! **IMPORTANT: be careful not to damage the stock graphite gaskets during installation Akrapovič collector onto the rear stock header tubes!**

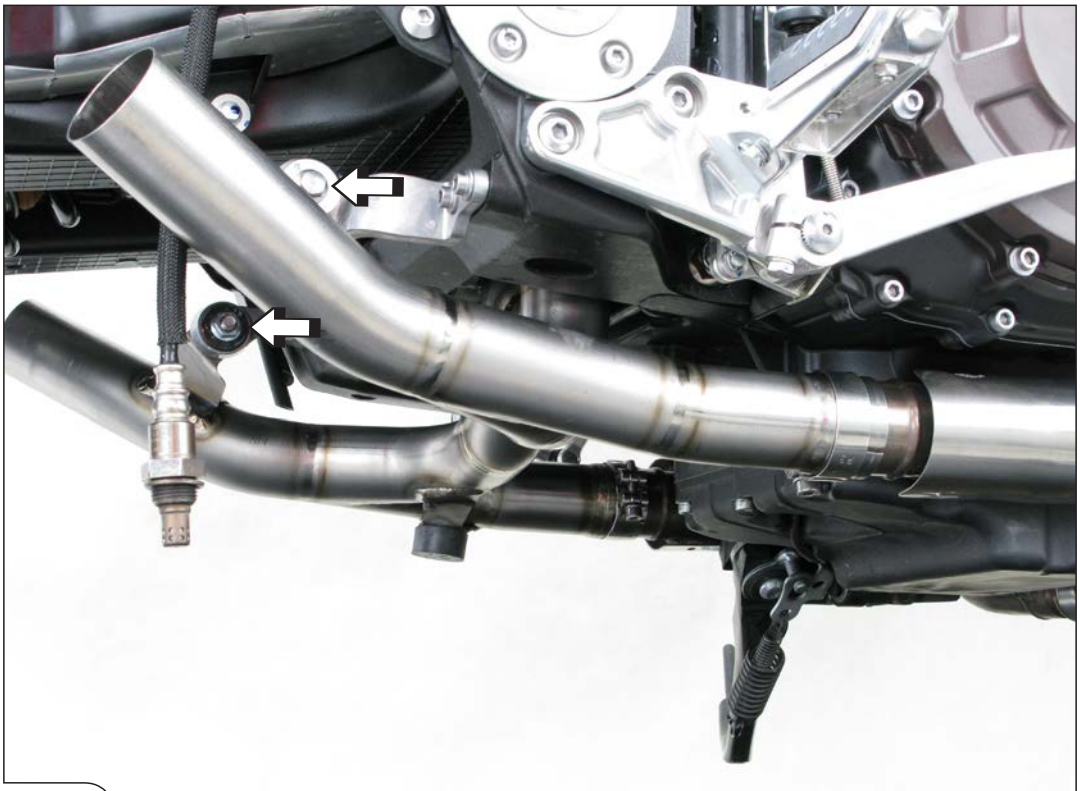

Figure 23

4. **For OPEN SLIP-ON only:** tighten the nuts of the stock header tubes **(Figure 24).**Tightening torque: 22Nm/16ftlb.

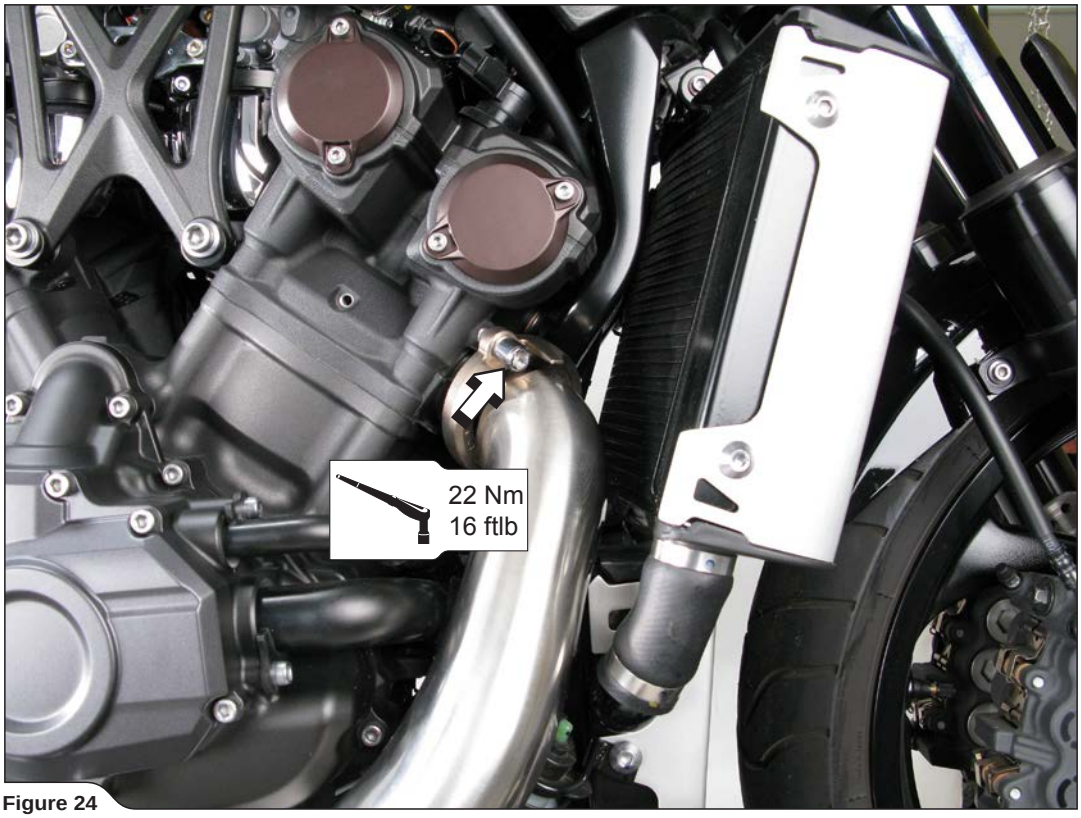

Figure 24

5. **For OPEN SLIP-ON only:** tighten the marked bolts of stock collector brackets and metal clamps **(Figure 25, 26).** Tightening torque for bolts of stock collector brackets: 22Nm/16 ftlb. Tightening torque for metal clamps: 9,8Nm/7ftlb.

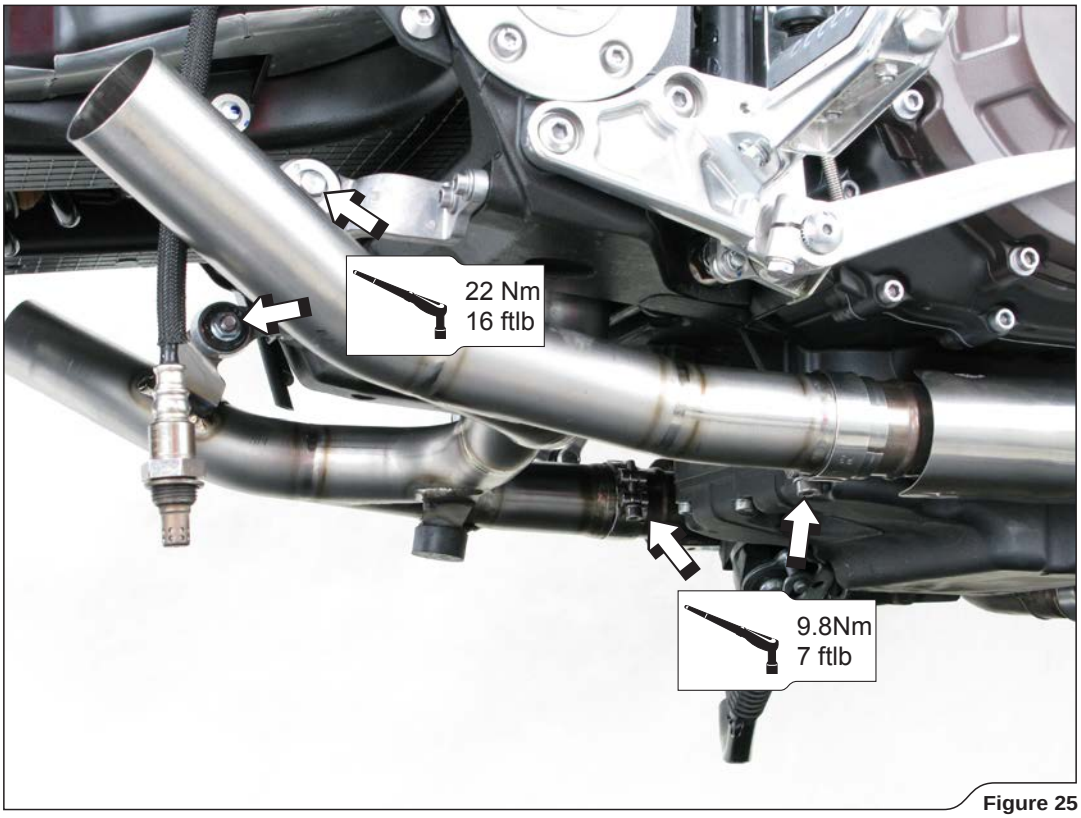

Figure 25

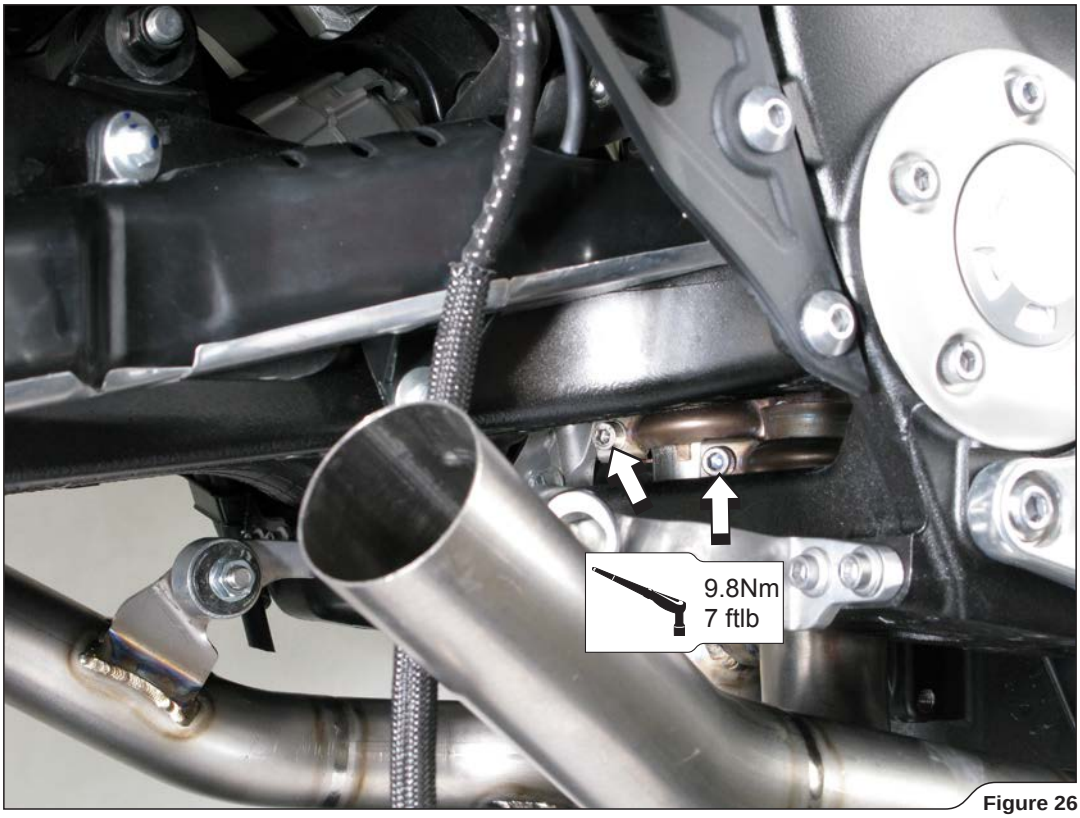

Figure 26

6. **For OPEN SLIP-ON only:** disconect the connector of the labda sensor and correctly reposition the electrical lead of the lambda sensor, so it can be installed onto the Akrapovič collector **(Figure 27).** Tighten the lambda sensor and attach the electrical lead of the lambda sensor using plastic ties; cut away excess **(Figure 28, 29, 30).**

! **IMPORTANT: grease only the threads of the lambda sensor with Akrapovič anti-seize lead-free copper paste (black tube)!**

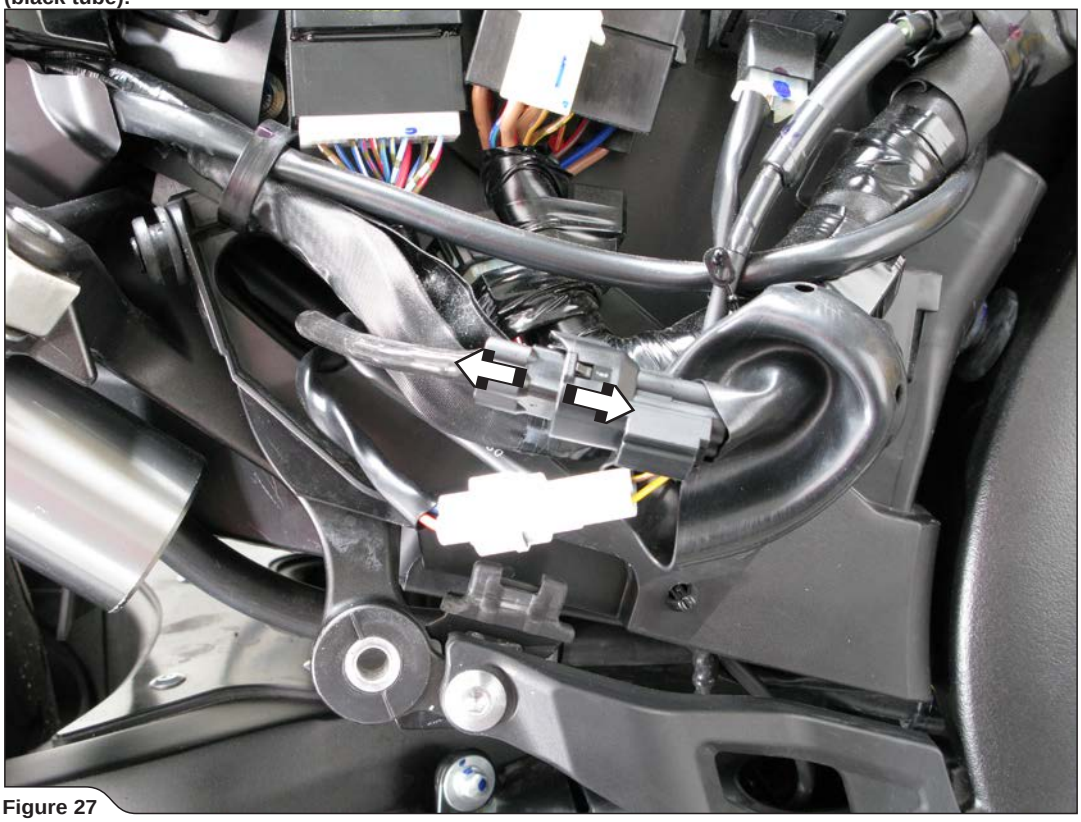

Figure 27

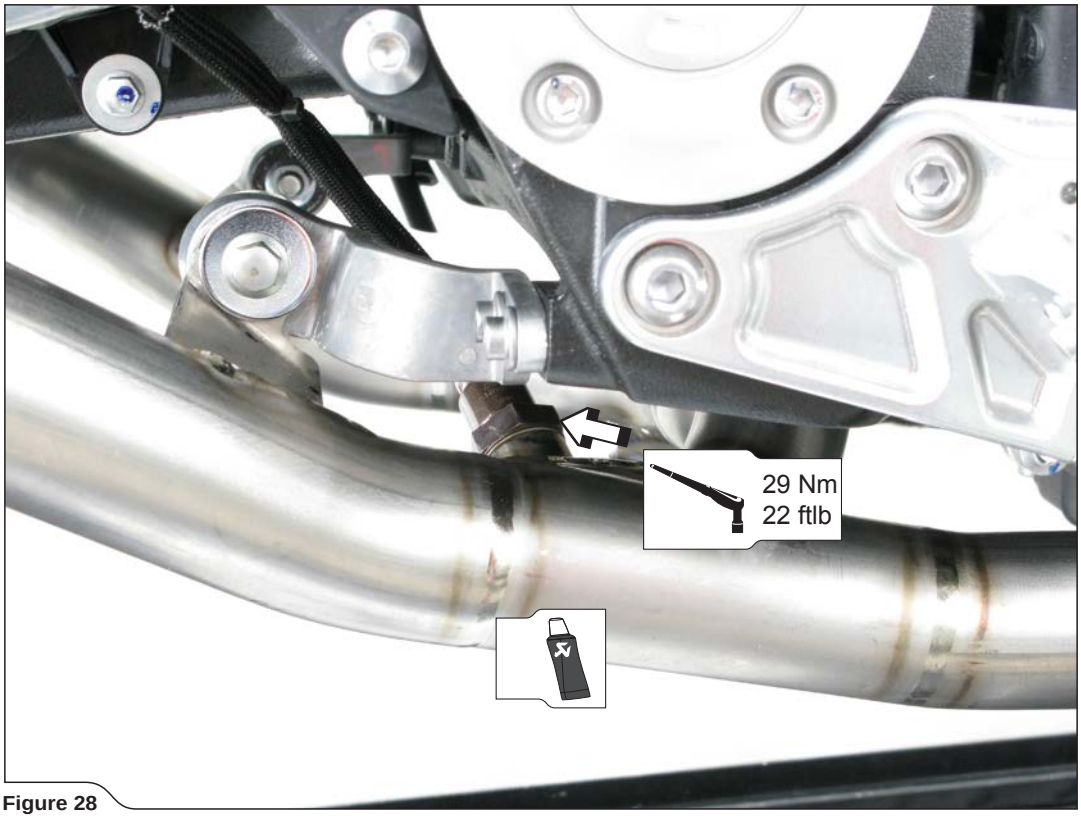

Figure 28

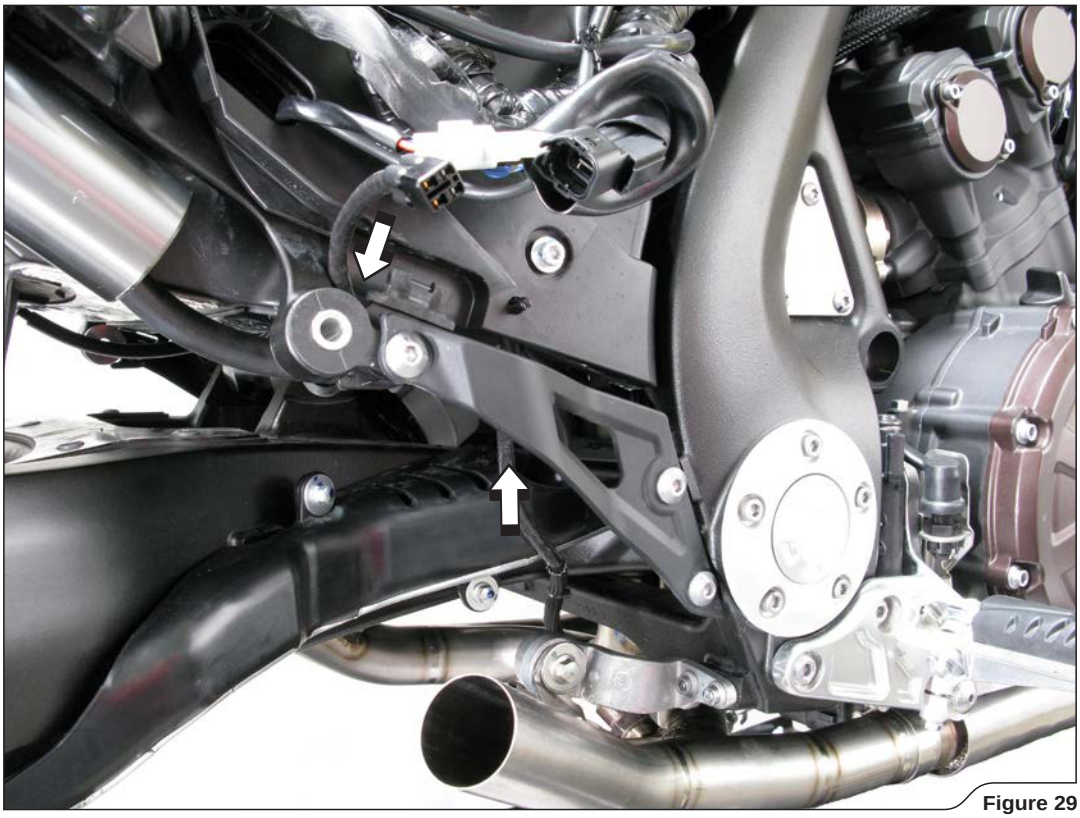

Figure 29

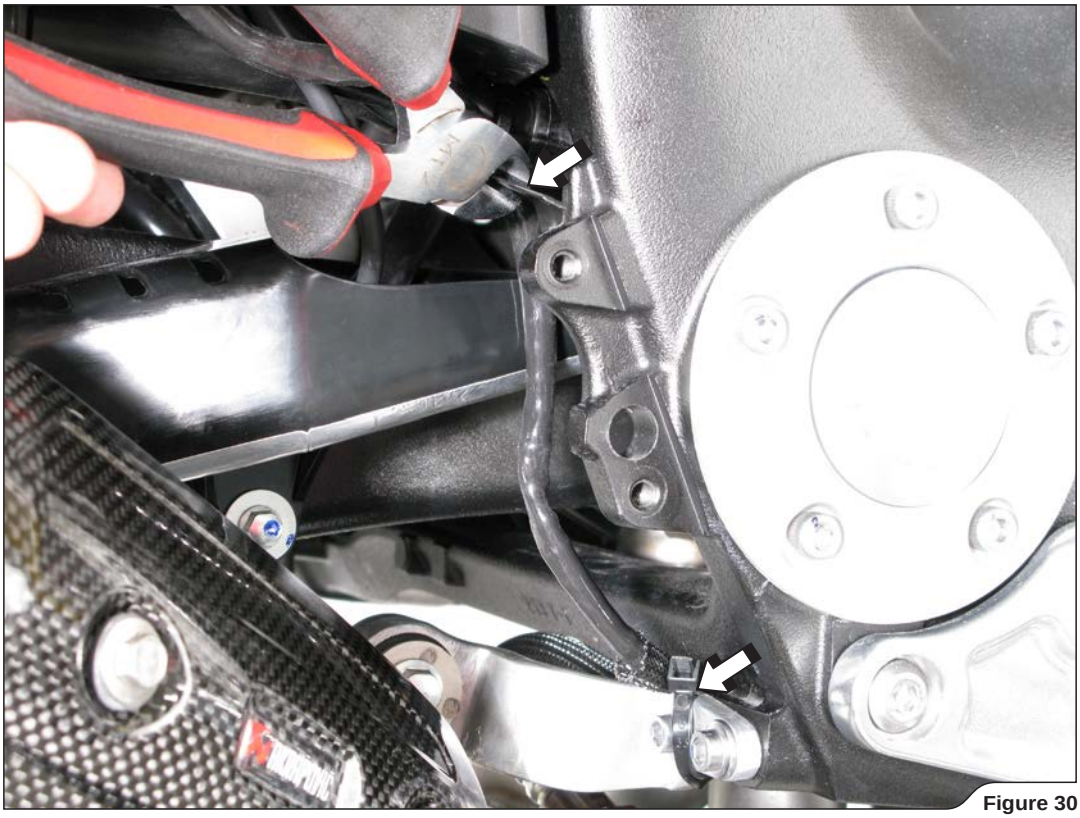

Figure 30

7. Install the heat / distance washers correctly **(Figure 31).** Install the heat shield brackets and correctly attach the metal clamps **(Figure 32).**

Figure 31

Figure 32

8. **For STREET LEGAL SLIP-ON only:** correctly position the Akrapovič carbon-fiber heat shields and slide them onto the catalytic converter box **(Figure 33).**

Figure 33

9. **For OPEN SLIP-ON only:** correctly position the Akrapovič carbon-fiber heat shields and slide them onto the Akrapovič collector **(Figure 34).**

Figure 34

10. **For BOTH SLIP-ON sistems:** coat the bolts and interior of the metal clamps with Akrapovič antseize lead-free coper paste (black tube) and corectly install them onto the Akrapovič mufflers **(Figure 35).**

! **IMPORTANT: use anti-seize copper paste on bolt threads and interior of the metal clamp!**

Figure 35

11. **For BOTH SLIP-ON sistems:** position the mufflers correctly, slide them onto the outlet sides of the catalytic converter box or Akrapovič collector. Align the mufflers in respect to the motorcycle and tighten the metal clamps and the bolts of the muffler brackets using stock bolts and Akrapovič nuts **(Figure 36).** Tightening torque for bolts of stock muffler brackets: 22Nm/16 ftlb. Tightening torque for metal clamps: 9,8Nm/7ftlb.

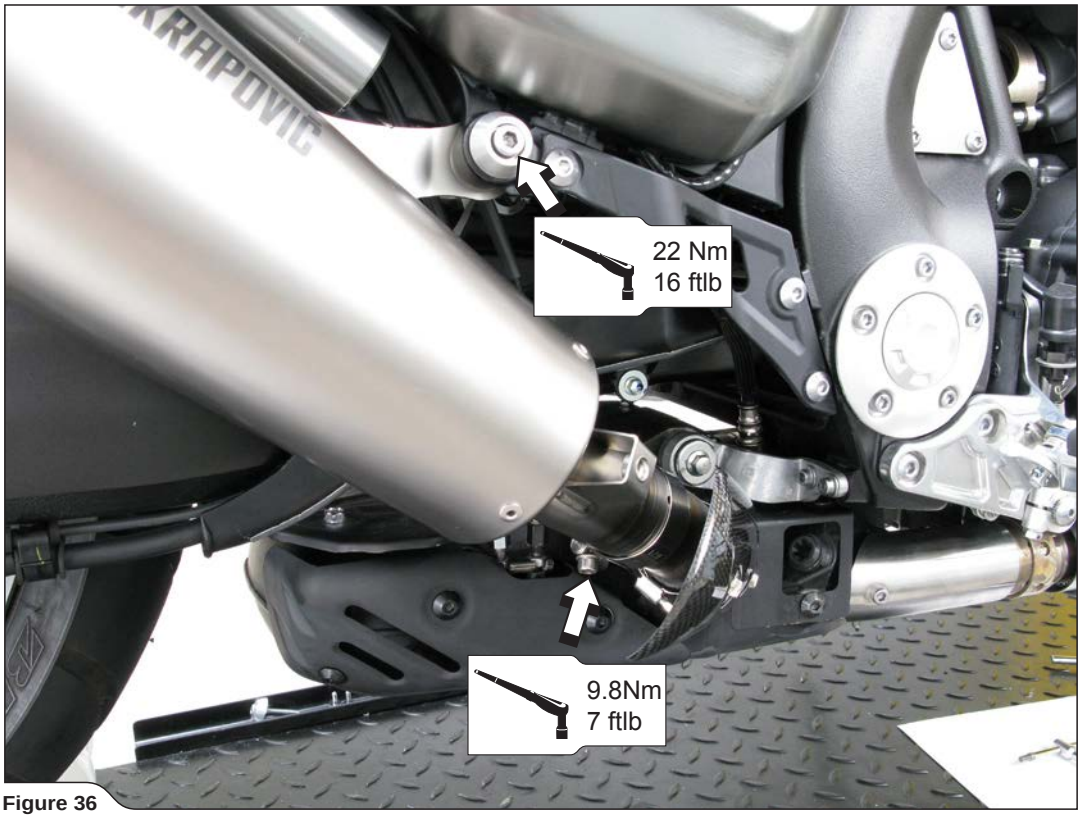

Figure 36

12. **For BOTH SLIP - ON sistem:** tighten the heat shield metal clamp and the heat shield's bolts **(Figure 37).** Perform the process on both sides of the motorcycle.

! **IMPORTANT: make sure the heat shield is not touching the collector or any part of the motorcycle!**

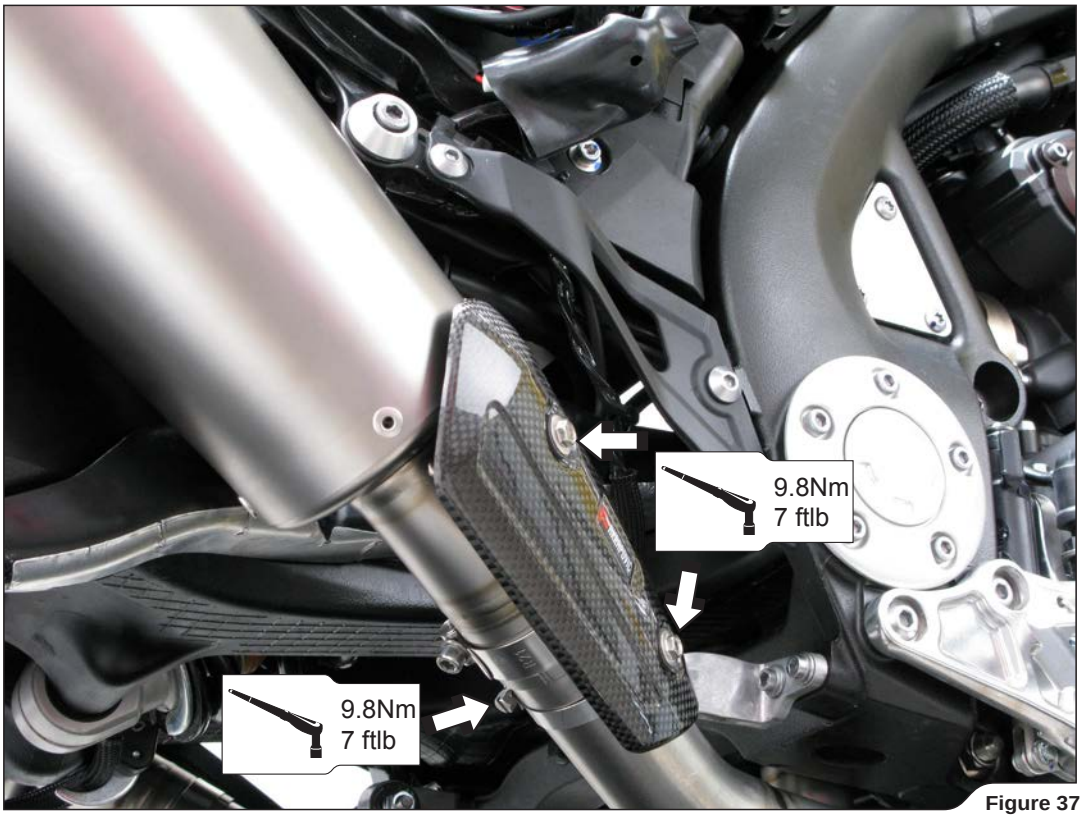

Figure 37

13. **For OPEN SLIP-ON only:** attach the seat cowling, seat panels, seats in the reverse order from the order in which they were removed **(Figure 38, 39, 40, 41).**

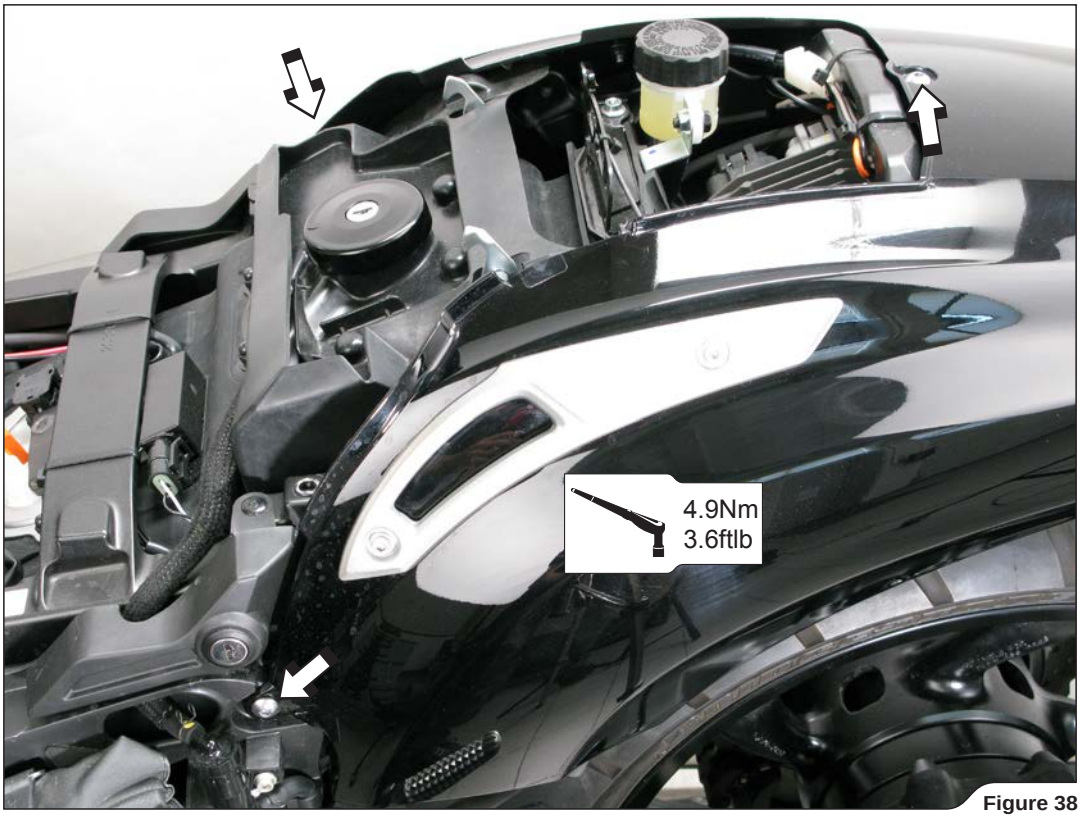

Figure 38

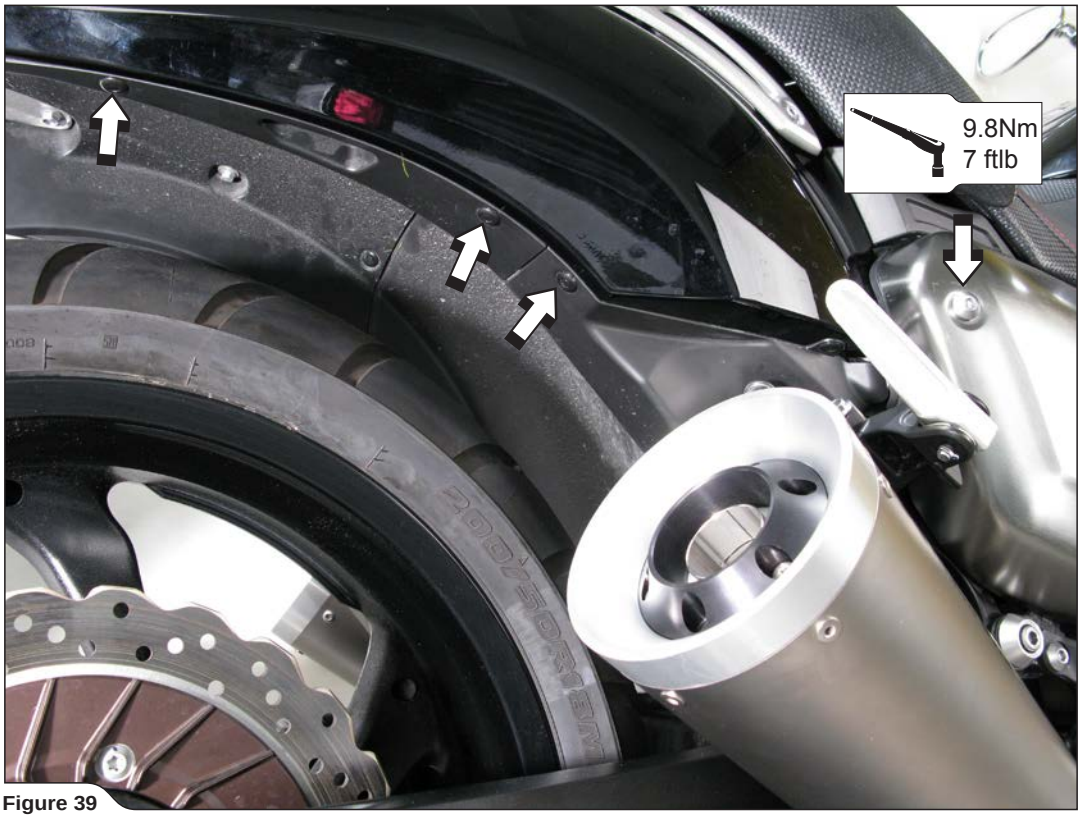

Figure 39

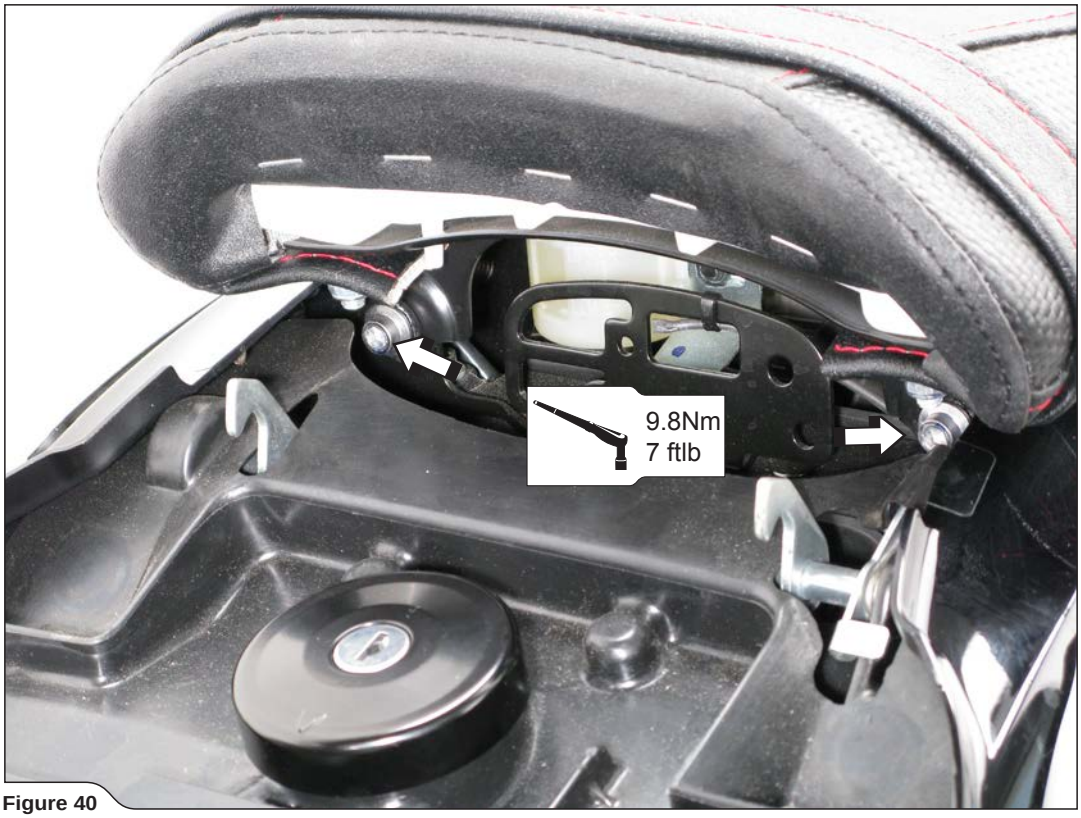

Figure 40

Figure 41

[EMPTY PAGE]

FINAL INSTALLATION AND MAINTENANCE:

Clean grease spots off all exhaust system surfaces, when installation is finished. Cleaning will prevent spots from burning onto the surface. Do not use aggressive chemical cleaners, because they can damage the surface or sticker.

1. Muffler – titanium outer sleeve: use a soft cloth sprayed with a multi-purpose spray lubricant (WD-40® or equivalent)*.
2. Muffler – carbon-fiber outer sleeve: use a soft dry cloth sprayed with all purpose foam cleaner, then wipe with a soft dry cloth.
3. Muffler – carbon-fiber outlet cap: use a soft dry cloth sprayed with all purpose foam cleaner, then wipe with a soft dry cloth.
4. Painted mufflers and parts – use a soft cloth sprayed with all purpose foam cleaner, then wipe with a soft dry cloth.
5. Chrome plated mufflers and parts: use a soft cloth sprayed with all purpose foam cleaner, then wipe with a soft dry cloth.
6. Stainless steel pipes: use a soft cloth sprayed with a contact cleaner, then wipe with a soft dry cloth.
7. Titanium pipes: use a soft cloth sprayed with a multi-purpose spray lubricant (WD-40® or equivalent)*.

*WD-40® is a trademark of the WD-40 Company.

Periodically make sure all the bolts and springs are sufficiently tight.

! **IMPORTANT: make sure all the bolts are sufficiently tightened. In case the exhaust system touches the cowling or other parts repeat the adjustment of the exhaust system or contact your authorized dealer!**

! **CAUTION: after running engine for 30 minutes, retighten the bolts of the Akrapovič carbon-fiber heat shield!**

INSTALLATION TIP: IT IS NORMAL IF WHITE SMOKE COMES OUT OF THE MUFFLER DURING THE FIRST 100 KM AFTER REPLACEMENT.

INSTALLATION TIP: A CHANGE IN THE COLOR OF THE EXHAUST SYSTEM IS NORMAL DUE TO THE HIGH TEMPERATURES.

! **CAUTION: DO NOT STAND BEHIND THE MUFFLER AT ANY TIME.**

! **IMPORTANT: DO NOT USE AUTOMOTIVE WHEEL CLEANERS OR ANY CLEANING PRODUCTS WHICH CONTAIN ACIDIC ADDITIVES TO CLEAN AKRAPOVIČ EXHAUST SYSTEMS.**

TROUBLESHOOTING:

Problem	Possible cause	Solution
Exhaust gas leaks out of the muffler/pipe clamp connections	loosened clamp	tighten the clamp to specified torque
	connection is not completely joined	tap the connection into place and tighten the clamp to specified torque